Hypoxia and Complement-and-Coagulation Pathways in the Deceased Organ Donor as the Major Target for Intervention to Improve Renal Allograft Outcome

Jeffrey Damman,[1] Vincent W. Bloks,[2] Mohamed R. Daha,[3,4] Peter J. van der Most,[5] Bahram Sanjabi,[6] Pieter van der Vlies,[6] Harold Snieder,[5] Rutger J. Ploeg,[7] Christina Krikke,[8] Henri G.D. Leuvenink,[8] and Marc A. Seelen[4]

Background. In the last few decades, strategies to improve allograft survival after kidney transplantation have been directed to recipient-dependent mechanisms of renal injury. In contrast, no such efforts have been made to optimize organ quality in the donor. Optimizing deceased donor kidney quality opens new possibilities to improve renal allograft outcome. **Methods.** A total of 554 kidney biopsies were taken from donation after brain death (DBD) and donation after cardiac death (DCD) kidneys before donation, after cold ischemia and after reperfusion. Healthy living donor kidney biopsies served as controls. Transcriptomics was performed by whole genome microarray analyses followed by functional pathway analyses. **Results.** Before organ retrieval and before cessation of blood circulation, metabolic pathways related to hypoxia and complement-and-coagulation cascades were the major pathways enhanced in DBD donors. Similar pathways were also enriched in DCD donors after the first warm ischemia time. Shortly after reperfusion of DCD grafts, pathways related to prolonged and worsening deprivation of oxygen were associated with delayed graft function in the recipient. **Conclusion.** In conclusion, this large deceased donor study shows enrichment of hypoxia and complement-and-coagulation pathways already in DBD donors before cessation of blood flow, before organ retrieval. Therefore, future intervention therapies should target hypoxia and complement-and-coagulation cascades in the donor to improve renal allograft outcome in the recipient.

(*Transplantation* 2015;99: 1293–1300)

Renal allograft survival after kidney transplantation has not improved considerably in the last few decades. Long-term renal allograft survival after kidney transplantation is affected by different variables including donor cause of death, donor age, duration of brain death (BD), kidney preservation solutions and methods, duration of cold and warm ischemia, reperfusion injury, human leukocyte antigen matching and acute rejection.[1-4] In contrast to substantial improvements in renal allograft survival in the recipient, less progress has been made to optimize organ quality in the donor. This is illustrated by significantly higher levels of delayed graft function (DGF) after transplantation of kidneys retrieved from deceased donors compared to living donors.[5] Delayed graft function is a common clinical outcome early after transplantation which mainly affects allografts retrieved from donation after cardiac death (DCD) and extended criteria donors. Although still a matter of debate, it is believed that donor kidneys that suffer DGF have inferior long-term transplant outcomes.[6] Because most kidneys are retrieved from donation after brain death (DBD) and DCD donors, optimizing donor organ quality would open new possibilities to improve renal allograft outcome. However,

Received 12 May 2014. Revision requested 2 June 2014.

Accepted 4 September 2014.

[1] Department of Pathology, Academic Medical Center Amsterdam, the Netherlands.

[2] Department of Pediatrics, University Medical Center Groningen, University of Groningen, the Netherlands.

[3] Department of Nephrology, Leiden University Medical Center, Leiden, the Netherlands.

[4] Department of Nephrology, University Medical Center Groningen, Groningen, the Netherlands.

[5] Department of Epidemiology, Unit of Genetic Epidemiology and Bioinformatics, University Medical Center Groningen, University of Groningen, the Netherlands.

[6] Department of Genetics, University Medical Center Groningen, University of Groningen, the Netherlands.

[7] Department of Surgery, University of Oxford, Oxford, United Kingdom.

[8] Department of Surgery, University Medical Center Groningen, Groningen, the Netherlands.

This work was sponsored, in part, by ViroPharma Incorporated.

The authors declare no conflicts of interest.

D.J. designed and performed experiments, analyzed data, and wrote the article. B.V.W., V.D.M.P., S.B., and V.D.V.P. analyzed the data. D.M.R., S.H., P.R.J., K. C., L.H.G., and S.M.A. edited and approved the final article.

Correspondence: Jeffrey Damman, MD, PhD, Academic Medical Center Amsterdam, Department of Pathology, Meibergdreef 9, 1105 AZ, Amsterdam, the Netherlands. (j.damman@amc.nl).

Supplemental digital content (SDC) is available for this article. Direct URL citations appear in the printed text, and links to the digital files are provided in the HTML text of this article on the journal's Web site (www.transplantjournal.com).

Copyright © 2014 Wolters Kluwer Health, Inc. All rights reserved.

ISSN: 0041-1337/15/9906-1293

DOI: 10.1097/TP.0000000000000500

Copyright © 2015 Wolters Kluwer Health, Inc. All rights reserved.

until now, lack of adequate insight into the underlying mechanisms of renal injury during transplantation of deceased donor kidneys has hampered the development of targeted drug therapy.

Recent technologies advances have provided new opportunities to improve insight in the pathogenesis of disease by means of a systems biology approach including genomics, transcriptomics, proteomics and metabolomics. Transcriptomics followed by functional pathway analyses integrates the multiple interacting genes that are involved in the development of disease, in contrast to traditional candidate gene selection analysis. Transcriptomics, however, requires a large study cohort and representative tissue for analysis to give crucial insight into the key factors leading to injury of kidneys from deceased donors.[7]

During the last decade, our group and others have largely identified the pathogenesis of renal injury in experimental models of BD.[8,9] In contrast, less data exist on the pathogenetic mechanisms leading to renal injury in DCD donors. Furthermore, only few experimental studies have compared the relative contribution of the subsequent genetic changes caused by cold ischemia and reperfusion in experimental models.[10,11] Importantly, human kidney biopsy gene expression studies included a low number of patients and did not include donor biopsies taken before cold ischemia and only analyzed single candidate genes.[12-17]

The aim of the present study is to analyze the relative contribution of genetic changes that are associated with BD, cardiac arrest, cold ischemia and reperfusion. It differs from earlier studies in several important aspects. First, it includes human DBD and DCD donor biopsies taken *before* donation and can therefore be compared with biopsies *after* cold ischemia and reperfusion. Second, living donor biopsies from perfectly healthy kidneys are used as a reference. Third, it compares paired biopsies from the same kidney of DBD as well as DCD donor kidneys. Finally, each study group included a high number of patients and therefore pathway analyses, instead of single gene analyses, could be performed. The results of this study will reveal the optimal timing and new targets for intervention to improve renal allograft outcome.

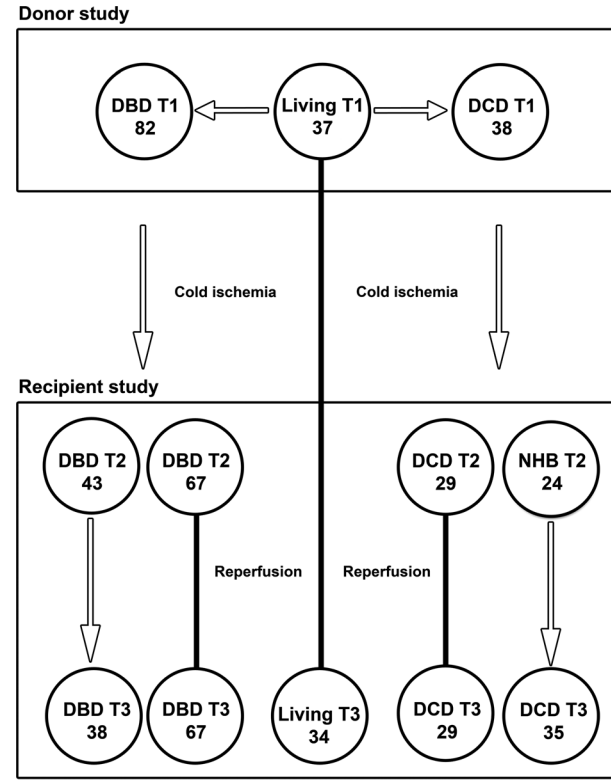

FIGURE 1. Overview of the biopsies taken from different donor types at different timepoints included in the study. In the donor study, a T1 biopsy (n = 37) was taken from living donors before clamping the renal artery, before nephrectomy (the control group). In DBD donors, a T1 donor biopsy (n = 82) was taken after the brain death period, before cessation of blood flow and organ retrieval. In DCD donors, a T1 donor biopsy (n = 38) was taken after the WIT1) between cardiac arrest and organ retrieval. Unpaired analyses (*open arrows*). The recipient study only included patients transplanted in the UMCG. In the paired study (*black connected lines*), paired T2-T3 biopsies of a DBD (n = 67) or DCD (n = 29) kidneys were taken at the end of cold ischemia (T2) and 45 to 60 min after reperfusion (T3). In the unpaired study (*open arrows*), unpaired analyses was performed between T2 and T3 biopsies of different DBD (n = 43 vs. n = 38) or DCD (n = 24 vs n = 35) kidneys. In the living study, paired analyses was performed between T1-T3 (n = 34) living donor kidneys. The influence of cold ischemia was investigated by unpaired analyses (open arrows) between DBD T1 biopsies (n = 82) and all DBD T2 biopsies (n = 43 + 67) or DCD T1 biopsies (n = 38) and all DCD T2 biopsies (n = 29 + 24). WIT1, first warm ischemia time; DBD, donation after brain death; DCD, donation after cardiac death.

RESULTS

The Donor Cohort

To explore the underlying processes triggered in deceased donor kidneys before organ retrieval, the transcriptional profile was compared to that obtained from living donor kidneys (Fig. 1). In DBD donor kidneys (n = 82), 2,270 genes were found to be differentially expressed compared to living donor kidneys (n = 37, fold changes [FC] ≥ 1.1). Pathway analysis in database for annotation, visualisation and integrated discovery (DAVID) and gene set enrichment analysis (GSEA) revealed significant enrichment of the listed genes in Kyoto Encyclopedia of Genes and Genomics (KEGG) pathways related to metabolism and complement and coagulation cascades (**Table S2, SDC,** http://links.lww.com/TP/B84). In DCD donor kidneys (n = 38), 1,933 genes were differentially expressed between DCD and living donor kidneys (n = 37, FC ≥ 1.1). Similar pathways were found to be enriched as found in DBD versus living donor kidneys (**Table S3, SDC,** http://links.lww.com/TP/B84). No additional pathways were revealed using a cutoff of FC that is 1.3 or higher.

From 31 of the 120 deceased donors that were included in the study, we also collected biopsies of the left and right kidney from the same donor. Only the left biopsy was included in the aforementioned analyses. Additional analyses of left or right deceased kidneys versus living donor kidneys revealed almost identical pathway enrichment within the same donor (**Table S4, SDC,** http://links.lww.com/TP/B84).

Both in DBD and DCD donors, glycolysis or gluconeogenesis was found to be one of the most significantly enriched pathways. Genes transcribing important glycolytic enzymes were upregulated in concert, whereas genes transcribing gluconeogenesis enzymes were all downregulated (Fig. 2). Importantly, in both DBD and DCD donors compared to living donors, hypoxia inducible factor 1, alpha subunit (HIF1A),

Copyright © 2015 Wolters Kluwer Health, Inc. All rights reserved.

was induced (DBD, 1.87-fold; DCD, 1.60-fold). Transcriptional changes of complement-and-coagulation cascades indicated upregulation of classical, lectin, and alternative pathway genes as well as genes of the common terminal pathway in DBD and DCD donors. Crucial procoagulatory genes of the coagulation system were upregulated, whereas important fibrinolytic genes were downregulated (Fig. 3).

Cold Ischemia

To investigate the additional effects of cold ischemia on the expression profile found in DBD donor kidneys, T2 biopsies from the recipient cohort were compared with T1 biopsies from the donor cohort (Fig. 1). Unpaired analysis of DBD T2 (n = 110) biopsies, taken at the end of cold ischemia, compared to DBD T1 (n = 82) donor biopsies, revealed no significantly enriched pathways. Also, analysis of DCD T2 (n = 53) biopsies compared to DCD T1 (n = 38) biopsies did not reveal any significantly enriched pathways.

Reperfusion

First, the impact of reperfusion on living donor kidneys was analyzed by paired analysis of T3 reperfusion biopsies (n = 34) with T1 donor biopsies (n = 34, Fig. 1). Paired analysis revealed enrichment of mitogen activated protein kinase (MAPK) and p53 signaling pathways (**Table S5a, SDC,** http://links.lww.com/TP/B84).

Subsequently, reperfusion of DBD donor kidneys was analyzed in two different cohorts. First, a paired analysis was performed on a group of paired T3-T2 biopsies. Second, an unpaired analysis was performed on T3-T2 biopsies of unpaired kidney biopsies. Using a cutoff of FC that is 1.1 or higher in expression level, significant enrichment of oxidative phosphorylation, ribosome pathways, MAPK signaling pathway, and glycosylphosphatidylinositol anchor biosynthesis was demonstrated and confirmed by GSEA. In addition, using FC that is 1.3 or higher, paired analysis revealed enrichment of nucleotide-binding oligomerization domain (NOD)-like receptor, MAPK, and cytokine-cytokine receptor pathways (**Table S6a, SDC,** http://links.lww.com/TP/B84). Analysis of the second set of unpaired biopsies confirmed NOD-like receptor and MAPK pathways and also found enrichment of complement-and-coagulation pathways (**Table S6a, SDC,** http://links.lww.com/TP/B84).

In kidneys from DCD donors, paired and unpaired analyses revealed significant overrepresentation of similar pathways compared to DBD in T3 versus T2 biopsies. Pathways of MAPK, NOD-like receptors, chemokine signaling, and antigen presentation were significantly enriched after reperfusion of a DCD graft (FC ≥ 1.3, **Table S7a,SDC,** http://links.lww.com/TP/B84). Gene set enrichment analysis confirmed the involvement of NOD-like receptor pathways in reperfusion of a DCD graft (**Table S7b,SDC,**

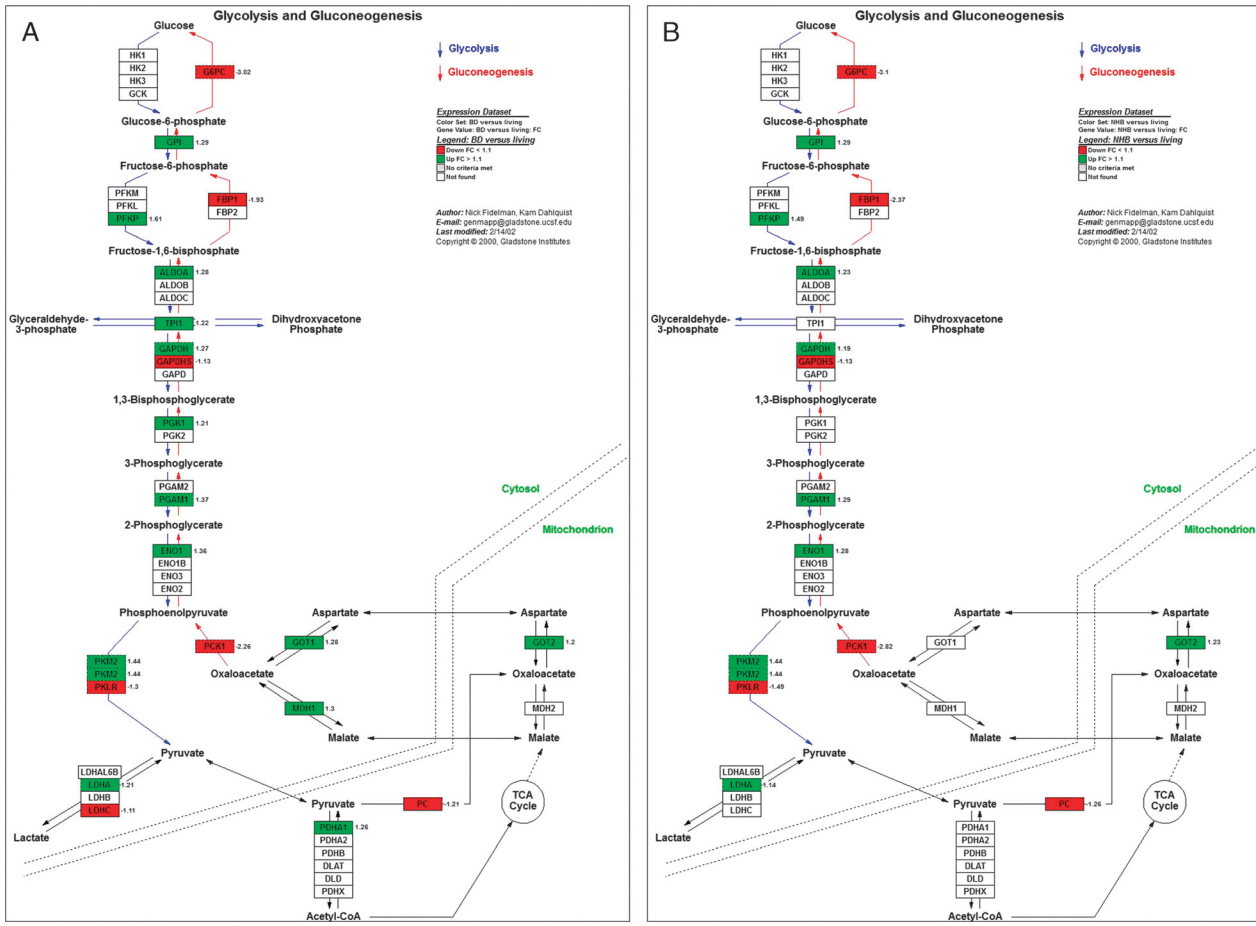

FIGURE 2. A, KEGG glycolysis and gluconeogenesis pathway changes in DBD versus living donors. B, KEGG glycolysis and gluconeogenesis pathway changes in DCD versus living donors. KEGG, Kyoto Encyclopedia of Genes and Genomics; DBD, donation after brain death; DCD, donation after cardiac death.

Copyright © 2015 Wolters Kluwer Health, Inc. All rights reserved.

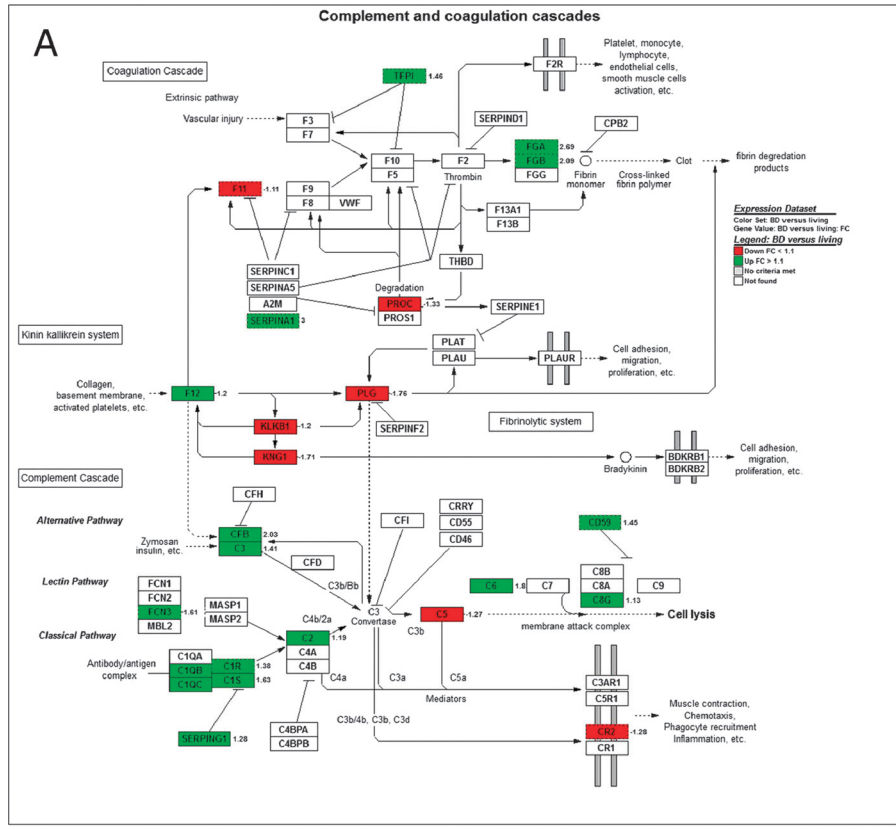

FIGURE 3. A, KEGG Complement and coagulation pathway changes in DBD versus living donors. B, KEGG complement-and-coagulation pathway changes in DCD versus living donors. KEGG, Kyoto Encyclopedia of Genes and Genomics; DBD, donation after brain death; DCD, donation after cardiac death.

Copyright © 2015 Wolters Kluwer Health, Inc. All rights reserved.

TABLE 1.

Globaltest multivariate analyses for the risk of DGF after renal transplantation of DCD donor kidneys at the moment of reperfusion (T3)

	Multivariate analysis[a]					
KEGG pathway	*P*	FDR	Statistic	Expected	SD	Cov
Ribosome	0.000982	0.0497	9.965	1.98	1.488	157
RNA degradation	0.001468	0.0497	8.288	2.00	1.244	94
GPI anchor biosynthesis	0.002278	0.0497	8.117	2.01	1.320	32
Mismatch repair	0.002357	0.0497	8.900	1.99	1.526	34
Homologous recombination	0.002609	0.0497	8.541	2.00	1.468	38
RNA transport	0.002703	0.0497	7.316	1.99	1.181	198
Huntington disease	0.003210	0.0497	7.915	2.01	1.328	210
Base excision repair	0.003213	0.0497	7.080	2.00	1.236	43
Protein export	0.003252	0.0497	8.192	2.00	1.414	32
Ribosome biogenesis in eukaryotes	0.003257	0.0497	7.071	1.99	1.156	101
SNARE interactions in vesicular transport	0.003264	0.0497	6.996	2.00	1.139	49
N-glycan biosynthesis	0.003665	0.0497	6.223	1.99	1.085	58
Proteasome	0.003709	0.0497	8.485	1.99	1.508	64
Basal transcription factors	0.003721	0.0497	6.787	2.00	1.132	45
Protein processing in endoplasmic reticulum	0.003825	0.0497	6.787	1.99	0.957	229
Alzheimer disease	0.003825	0.0497	6.972	2.01	1.223	206
Spliceosome	0.003872	0.0497	7.241	2.00	1.235	174
Parkinson disease	0.003906	0.0497	8.687	2.01	1.555	133
RNA polymerase	0.004257	0.0497	7.147	2.00	1.266	31
DNA replication	0.004338	0.0497	7.884	2.00	1.456	50

[a] Adjusted for donor and recipient age, first warm ischemia time, cold ischemia time, HLA-DR mismatch and transplant number.
FDR, false discovery rate; statistic, test statistic; expected, expected value test statistic; SD, standard deviation. Cov; number of covariates; KEGG, Kyoto Encyclopedia of Genes and Genomics; DGF, delayed graft function; DCD, donation after cardiac death; HLA, human leukocyte antigen; GPI, glycosylphosphatidylinositol; SNARE, soluble NSF attachment protein receptors.

http://links.lww.com/TP/B84). No additional pathways were revealed using a cutoff of FC that is 1.1 or higher.

Association of Transcriptional Profile With Delayed Graft Function

Delayed graft function is a common clinical outcome after transplantation of DCD donor kidneys. Global test analyses were performed to find association of KEGG gene sets of DBD or DCD grafts that experienced DGF. Already shortly after reperfusion of DCD grafts, multiple pathways related to ER and mitochondrial stress, RNA degradation and DNA repair were significantly associated with DGF (Table 1). No association of DGF with gene expression profiles of DCD grafts at earlier timepoints were found. Also, no association of DGF with DBD gene expression profile was found at all other timepoints. No association of pathways at all timepoints in DBD or DCD donor kidneys with primary nonfunction (PNF) was found.

Malondialdehyde Level in the Urine

To investigate the timing and extent of hypoxia in deceased donors, malondialdehyde (MDA) was measured in the urine (Fig. 4). Directly after the diagnosis of BD (T0) and before organ retrieval (T1), urinary MDA was significantly higher compared to living donors ($P < 0.05$). Time-dependent changes in MDA levels between the moment of BD (T0) and organ retrieval (T1) could not be demonstrated. In DCD donors, no significant difference could be demonstrated in urinary MDA levels at the moment of donor call (T0) or before withdrawal of treatment (T1) compared to living donors. No changes in MDA levels related to surgery in living donors were found (T0 vs. T1).

DISCUSSION

Enhancing longevity of renal allografts is a major challenge for clinicians in the field of renal transplantation. In the last decades, strategies to improve long-term renal allograft survival have been mainly directed to recipient-dependent

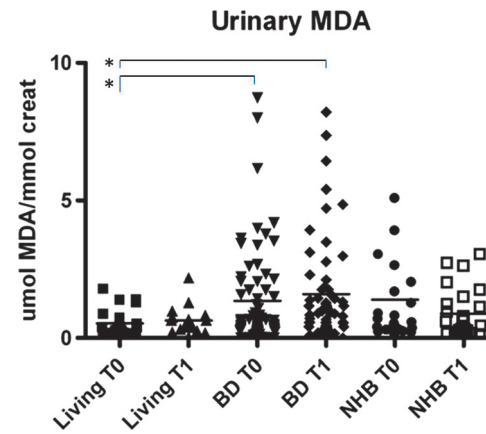

FIGURE 4. Level of urinary MDA in living, DBD and DCD donors. In living donors, urine was collected before anesthesia (T0) and before donation (T1). In DBD donors, urine was collected directly after diagnosis of BD (T0) and before organ retrieval (T1). In DCD donors, urine was collected at the moment of donor call to Eurotransplant (T0) and before ventilator switch off (T1). Significant differences are indicated ($P < 0.05$). MDA, malondialdehyde; DBD, donation after brain death; DCD, donation after cardiac death.

Copyright © 2015 Wolters Kluwer Health, Inc. All rights reserved.

mechanisms of renal allograft injury. In contrast, less efforts have been made to optimize donor organ quality. The present genome wide gene expression study reveals hypoxia and complement-and-coagulation cascades in the deceased organ donor as the major target for intervention to improve renal allograft outcome.

Hypoxia caused by cessation of renal blood flow is an inevitable consequence of kidney transplantation. Hypoxia is induced at the moment of organ retrieval until recovery of blood flow after reperfusion. Intriguingly, we now show that in DBD donors, renal hypoxia is already initiated *before* cessation of blood flow in the donor, comparable to DCD donor kidneys *after* cessation of blood flow. In both donor types, hypoxia was revealed by enrichment of glycolysis or gluconeogenesis pathways which showed significant induction of glycolytic gene expression. This is regulated via stabilization of HIF1A, which was induced in both donor types (**Figure S2, SDC,** http://links.lww.com/TP/B84).[18,19] Additional proof of hypoxia was found by induction of mitochondrial antioxidants superoxide dismutase 2, glutathione peroxidase and upregulation and enrichment of genes related to the proteasome. The increased level of urinary MDA in DBD compared to living donors supports these genetic pathway analyses. Donor pretreatment to reduce hypoxia in the donor could be a promising strategy to improve renal allograft outcome. One such strategy could be the upregulation of antihypoxic cytoprotective genes hemeoxygenase 1 and heat shock protein-70.[20] Pharmacological induction of hemeoxygenase 1 expression in experimental brain-dead donors has been shown to improve renal allograft survival.[21] Another therapeutic option might be stabilization of HIF1A by prolyl hydroxylase domain inhibitors, recently extensively reviewed by Akhtar et al.[22]

Besides hypoxia, also complement-and-coagulation cascades were significantly enriched in deceased donor kidneys before organ retrieval. The transcriptional profile reveals a procoagulable state and activation of all complement pathways in both donor types. These results confirm our previous study in a small cohort of DBD donors in which we found significant gene induction and protein deposition of complement C3 and fibrinogen.[23] Also, data from previous studies looking at complement single-gene expression in DBD kidneys *after* organ retrieval are in line with our results.[12-16] Therefore, it seems most advantageous to target complement and coagulation in the donor to improve long-term allograft survival. Inhibition of complement in brain-dead rats has already been proven to be successful to improve renal function.[24] The complement activation cascade can be targeted at different levels to attenuate complement mediated injury by using, for example, soluble complement regulator proteins, antibodies against complement components, their split products, or complement receptor antagonists. Only few of these agents have been used in patients for other indications than kidney transplantation. Recombinant or nanofiltered blood plasma–derived C1-esterase inhibitor is currently approved for routine prophylaxis of hereditary angioedema, and it blocks both the classical and the lectin pathway of complement activation, as well as proteases of the fibrinolytic, clotting, and kinin pathways.[25] Because this study also shows enrichment of coagulation pathways in deceased donors, C1-esterase inhibitor is likely to be beneficial for graft outcome because of its pleiotropic functions. Another therapeutic option might be the use a monoclonal antibody directed against complement C5 or C5a receptor, thereby inhibiting C5a-mediated chemotaxis and formation of the membrane attack complex.[26-28]

The impact of cold ischemia on renal allograft outcome is a matter of debate. In DBD and DCD donor kidneys, no pathways were found to be significantly enriched between organ retrieval and cold ischemia. These results suggest that targeting pathways revealed by transcriptomic analysis should be initiated in the donor instead of during preservation.

In our analysis of reperfusion biopsies, an apparent difference in pathway enrichment was found between living and deceased donors kidneys. Although in living reperfusion biopsies only induction of p53 and MAPK was found, both DBD and DCD reperfusion biopsies showed enrichment of NOD-like receptor pathways. This suggests that tissue hypoxia leads to cell necrosis and the release of danger associated molecular patterns (**Figure S3, SDC,** http://links.lww.com/TP/B84). The DBD grafts showed significant enrichment of downregulated genes of ribosome and oxidative phosphorylation pathways. The findings in DBD biopsies are part of the cell survival program in which adaptation to hypoxia is initiated, but are not associated with DGF. In contrast, in DCD reperfusion biopsies, multiple hypoxia-related pathways were associated with DGF (Table 1). The difference in findings might be explained by ischemic preconditioning (IP) of the deceased donor organ. In IP, an organ or tissue is exposed to a fixed period of ischemia to induce ischemic tolerance and protect the organ or tissue against a subsequent episode of ischemia. In experimental and clinical ischemia-reperfusion injury, IP has generated conflicting results.[29–31] It has been shown that the extent of IP is an important factor to reduce renal ischemia reperfusion injury.[32,33] Several mediators are proposed among which superoxide dismutase and HIF1A, which were also induced in DBD and DCD donors in our study. Therefore, the genetic changes in deceased donors in our study might reflect IP. Hypothetically, one would expect a comparable degree of IP-mediated protection in DBD and DCD donors because the nature and extent of hypoxia-induced pathways was almost identical between both donor types. However, DBD kidneys are only partially protected, while DCD kidneys are almost not protected against DGF. Possibly, the T1 biopsy in DCD donors does not fully reflect the genetic changes induced by WIT1 because the WIT1 is too short for sufficient gene induction at the moment of biopsy (taken directly after WIT1). Therefore, the hypoxia-related genetic changes at T1 in DCD donor kidneys reflect the hemodynamic changes on the ICU. It is the subsequent WIT1, inherent to DCD donation, that finally leads to DGF. The hypoxia-related pathways induced by the WIT1 become apparent later in T3 reperfusion biopsies and are associated with DGF. Although DBD kidneys are partially protected against ischemia-reperfusion injury by IP in the donor, IP is overwhelmed by the massive ischemic insult associated with DCD transplantation, leading to irreversible graft injury. This theory is funded by the hallmark study of Murray et al. who found that preconditioning merely allows organs to withstand only *marginally* longer periods of ischemia compared to non-preconditioned organs.[34]

Major pitfalls of transcriptome analysis are potential biases due to analysis of a small cohort, tissue heterogeneity and lack of replication studies.[11] Our study comprising a large cohort

Copyright © 2015 Wolters Kluwer Health, Inc. All rights reserved.

and sampling bias because of tissue heterogeneity is unlikely because paired (left and right) donor biopsies of the same donor showed identical gene pathway enrichment. Concerning replication, two separate cohorts of paired and unpaired transplants showed almost identical gene set enrichments. Therefore, we feel confident that the results of our analysis are representative measurements.

In conclusion, this large deceased donor study shows that hypoxia is already initiated in DBD donors before cessation of blood flow, before organ retrieval. The data suggest that the accepted dogma that hypoxic injury only occurs after ischemia-reperfusion has to be modified. Future intervention therapies should target hypoxia and complement-and-coagulation cascades in the donor to improve renal allograft outcome in the recipient.

MATERIALS AND METHODS

Patients, Kidney Biopsies, and Urine Samples

Between 2004 and 2009, kidney biopsy specimens were routinely obtained during organ recovery procedures from living, DBD, and DCD type III (awaiting cardiac arrest) donors. Transplant characteristics can be found in Table S1 (**SDC,** http://links.lww.com/TP/B84. All organ donors and recipients were white. Deceased donors who had stated their objection to participation in transplantation research in the Dutch Donor Registry, or whose kidneys were discarded after retrieval, were not included. All living donors were asked informed consent for taking biopsy specimens. Biopsies were taken using a 16-gauge needle (Acecut; TSK Laboratory, Japan), preserved in RNALater (Sigma, St. Louis, MO) and subsequently stored at −80°C until analysis. Biopsies were obtained from three different study cohorts: (1) deceased donor cohort, (2) recipient cohort, and (3) living cohort (Fig. 1).

In the deceased donor cohort, donor biopsies were collected from DBD and DCD donors whose kidneys were donated in the Northern part of the Netherlands, while their kidneys were transplanted elsewhere in the Eurotransplant region. In DBD donors, biopsies were taken before cessation of blood circulation, before organ retrieval (T1, n = 82). In DCD donors, biopsies were taken after cardiac arrest and the first warm ischemia time (WIT1), before organ retrieval (T1, n = 38). Of these transplants, no paired T2-T3 biopsies were available (Fig. 1).

In the recipient cohort, biopsies were collected from renal allografts that were transplanted only in the University Medical Center Groningen. Biopsies were taken at the end of cold ischemia before organ implantation (T2) and 45 to 60 min after reperfusion (T3). Of recipients receiving a DBD donor kidney, 67 paired T2-T3 and 43 (T2)/38 (T3) unpaired biopsies were available. Of recipients receiving a DCD donor kidney, 29 paired T2-T3 and 24 (T2)/35 (T3) unpaired biopsies were available. No paired T1 donor biopsies of these grafts were available (Fig. 1).

In the living cohort, donation and transplantation procedures were all performed in the UMCG. Donor biopsies were taken before donor nephrectomy before clamping the renal artery (T1, n = 37). In recipients, biopsies were taken 45 to 60 min after reperfusion (T3, n = 34). Paired T1-T3 biopsies were available for 34 transplants (Fig. 1).

In living and DBD donors, urine was collected at T1. In DCD donors, a T1 urine sample was collected before ventilator switch off. An additional paired baseline urine sample (T0) was collected in living donors before start of operation in DBD donors directly after diagnosis of BD and in DCD donors at the moment of organ call to Eurotransplant (**Figure S1, SDC,** http://links.lww.com/TP/B84).

RNA Isolation

Kidney biopsy specimens were mechanically disrupted before lysis and RNA was isolated with TRIzol reagent (Invitrogen, Carlsbad, CA) according to the manufacturer's instructions. The quality and quantity of the RNA was determined by high throughput Caliper GX LabChip RNA kit (Caliper).

Amplification, Labeling, and Hybridization of RNA Samples

Ambion Illumina Total Prep RNA kit was used to transcribe 300 ng RNA to cRNA according to the manufacturer's instructions. A total of 750 ng of cRNA was hybridized at 58°C for 16 hr to the Illumina HumanHT-12 v4 Expression BeadChips. BeadChips were scanned using Iscan Software (Illumina, San Diego, CA).

Microarray Data Analysis

The raw data files were processed using GenomeStudio Software and further analyzed using GeneSpring GX 12.0 software (Agilent, Santa Clara, CA). Data normalization was performed using the default GeneSpring GX 12.0 median shift normalization to the 75th percentile (applying a log2 transformation) and baseline transformation using the median of all samples. GeneSpring's built-in statistical software was used to identify lists of differentially expressed genes. Data were filtered using FC of 1.1 or higher or 1.3 and a Benjamini-Hochberg False Discovery Rate less than 0.01.

For a comparison between the three different donor types at T1, one-way analysis of variance and Tukey post hoc tests were performed. For a comparison between the donor cohort (T1) and the recipient cohort (T2), unpaired t tests were performed. For transplants of which paired biopsies were available (T2 and T3), paired t test were performed. For transplants of which only one timepoint biopsy was available (T2 or T3), unpaired t tests were performed (Fig. 1).

The data discussed in this publication have been deposited in the Gene Expression Omnibus (NCBI) and are accessible online through GEO Series accession number GSE43974 at http://www.ncbi.nlm.nih.gov/geo/query/acc.cgi?acc= GSE43974).

Pathway Analyses

Pathway analyses were performed using two different approaches. First, lists of genes that were found to be differentially expressed between groups were loaded into the web-based, client or server application database for DAVID (http://apps1.niaid.nih.gov/david/). Second, the complete set of gene expression data was loaded into the GeneSpring built-in software for GSEA.[35] Permutation testing was performed with 1,000 permutations per gene set. Both approaches were used to identify significantly enriched biological pathways based on the KEGG database (https://www.genome.ad.jp/kegg). Gene sets with a Benjamini Hochberg False Discovery Rate

Copyright © 2015 Wolters Kluwer Health, Inc. All rights reserved.

less than 0.05 were considered to be significantly enriched. GenMAPP/MAPPFinder was used to visualize pathways.[36]

Association of Transcriptional Profile With Clinical Outcome

Globaltest analysis was performed to find association of KEGG gene sets of DBD and DCD grafts with DGF and PNF. Delayed graft function was defined as the requirement for dialysis within the first week after transplantation. Primary nonfunction was defined as nonfunctioning of the allograft from transplantation on. The Globaltest investigates whether the genes in the geneset have a higher association with the response than expected by chance. The null hypothesis of the Globaltest assumes that all regression coefficients of all the genes in the geneset are zero and therefore have no predictive ability for DGF or PNF. It uses the full data set instead of differential expressed genes and provides a single *P* value for the gene set, instead of a *P* value for each gene.[37]

Level of MDA in Donor Urine

Malondialdehyde was estimated by measuring the amount of thiobarbituric acid-reactive substances in urine. Twenty microliters of urine sample was mixed with 90 μL of a 3% sodiumdodecylsulfate solution and 10 μL of 0.05 M butylated hydroxytoluene. After pH adjustment of 2 to 3, 200 μL (0.7%) thiobarbituric acid was added, and samples were heated to 95°C for 30 min. The reaction product was precipitated with butanol and, absorbance was read at 530 nm. Levels were normalized using urinary creatinine values. For statistical analysis, the Kruskall-Wallis test was performed, followed by a Mann-Whitney posttest. All statistical tests were two-tailed with *P* value less than 0.05 regarded as significant.

ACKNOWLEDGMENTS

The authors thank Joseph Milano for reviewing the article.

REFERENCES

1. Legendre C, Canaud G, Martinez F. Factors influencing long-term outcome after kidney transplantation. *Transpl Int.* 2014;27:19.
2. Opelz G, Döhler B. Multicenter analysis of kidney preservation. *Transplantation.* 2007;83:247.
3. Moers C, Smits JM, Maathuis MH, et al. Machine perfusion or cold storage in deceased-donor kidney transplantation. *N Engl J Med.* 2009;360:7.
4. Nijboer WN, Moers C, Leuvenink HG, et al. How important is the duration of the brain death period for the outcome in kidney transplantation? *Transpl Int.* 2011;24:14.
5. Terasaki PI, Cecka JM, Gjertson DW, et al. High survival rates of kidney transplants from spousal and living unrelated donors. *N Engl J Med.* 1995;333:333.
6. Le Dinh H, Weekers L, Bonvoisin C, et al. Delayed graft function does not harm the future of donation-after-cardiac death in kidney transplantation. *Transplant Proc.* 2012;44:2795.
7. Naesens M, Sarwal MM. Molecular diagnostics in transplantation. *Nat Rev Nephrol.* 2010;6:614.
8. Schuurs TA, Morariu AM, Ottens PJ, et al. Time-dependent changes in donor brain death related processes. *Am J Transplant.* 2006;6:2903.
9. Kusaka M1, Pratschke J, Wilhelm MJ, et al. Activation of inflammatory mediators in rat renal isografts by donor brain death. *Transplantation.* 2000;69:405.
10. Hoeger S, Petrov K, Reisenbuechler A, et al. The additional detrimental effects of cold preservation on transplantation-associated injury in kidneys from living and brain-dead donor rats. *Transplantation.* 2009;87:52.
11. Saat TC, Susa D, Roest HP, et al. A comparison of inflammatory, cytoprotective and injury gene expression profiles in kidneys from brain death and cardiac death donors. *Transplantation.* 2014;98:15.
12. Naesens M, Li L, Ying L, et al. Expression of complement components differs between kidney allografts from living and deceased donors. *J Am Soc Nephrol.* 2009;20:1839.
13. Kusaka M, Kuroyanagi Y, Mori T, et al. Global expression profiles in 1-hour biopsy specimens of human kidney transplantation from donors after cardiac death. *Cell Transplant.* 2009;18:647.
14. Cravedi P, Maggiore U, Mannon RB. Low-density array PCR analysis of reperfusion biopsies: an adjunct to histological analysis. *Nephrol Dial Transplant.* 2010;25:4077.
15. Hauser P, Schwarz C, Mitterbauer C, et al. Genome-wide gene-expression patterns of donor kidney biopsies distinguish primary allograft function. *Lab Invest.* 2004;84:353.
16. Mueller TF, Reeve J, Jhangri GS, et al. The transcriptome of the implant biopsy identifies donor kidneys at increased risk of delayed graft function. *Am J Transplant.* 2008;8:78.
17. Avihingsanon Y, Ma N, Pavlakis M, et al. On the intraoperative molecular status of renal allografts after vascular reperfusion and clinical outcomes. *J Am Soc Nephrol.* 2005;16:1542.
18. Semenza GL. Hypoxia-inducible factors in physiology and medicine. *Cell.* 2012;148:399.
19. Eltzschig HK, Carmeliet P. Hypoxia and inflammation. *N Engl J Med.* 2011;364:656.
20. van Dullemen LF, Bos EM, Schuurs TA, et al. Brain death induces renal expression of heme oxygenase-1 and heat shock protein 70. *J Transl Med.* 2013;11:22.
21. Kotsch K, Francuski M, Pascher A, et al. Improved long-term graft survival after HO-1 induction in brain-dead donors. *Am J Transplant.* 2006;6:477.
22. Akhtar MZ, Sutherland AI, Huang H, et al. The role of hypoxia-inducible factors in organ donation and transplantation: the current perspective and future opportunities. *Am J Transplant.* 2014;14:1481.
23. Damman J, Nijboer WN, Schuurs TA, et al. Local renal complement C3 induction by donor brain death is associated with reduced renal allograft function after transplantation. *Nephrol Dial Transplant.* 2011;26:2345.
24. Damman J, Hoeger S, Boneschansker L, et al. Targeting complement activation in brain-dead donors improves renal function after transplantation. *Transpl Immunol.* 2011;24:233.
25. Davis AE III, Mejia P, Lu F. Biological activities of C1 inhibitor. *Mol Immunol.* 2008;45:4057.
26. Castellano G, Melchiorre R, Loverre A, et al. Therapeutic targeting of classical and lectin pathways of complement protects from ischemia reperfusion-induced renal damage. *Am J Pathol.* 2010;176:1648.
27. de Vries B, Matthijsen RA, Wolfs TG, et al. Inhibition of complement factor C5 protects against renal ischemia-reperfusion injury: inhibition of late apoptosis and inflammation. *Transplantation.* 2003;75:375.
28. Arumugam TV, Shiels IA, Strachan AJ, et al. A small molecule C5a receptor antagonist protects kidneys from ischemia/reperfusion injury in rats. *Kidney Int.* 2003;63:134.
29. Huang Y, Shan J, Wang C, et al. Can ischemic preconditioning alone really protect organs from ischemia reperfusion injury in transplantation. *Transpl Immunol.* 2009;20:127.
30. Torras J, Herrero-Fresneda I, Lloberas N, et al. Promising effects of ischemic preconditioning in renal transplantation. *Kidney Int.* 2002;61:2218.
31. Chen Y, Zheng H, Wang X, et al. Remote ischemic preconditioning fails to improve early renal function of patients undergoing living-donor renal transplantation: a randomized controlled trial. *Transplantation.* 2013;95:e4.
32. Wever KE, et al. Remote ischaemic preconditioning by brief hind limb ischaemia protects against renal ischaemia-reperfusion injury: the role of adenosine. *Nephrol Dial Transplant.* 2011;26:3108.
33. Lazaris AM, Maheras AN, Vasdekis SN, et al. Protective effect of remote ischemic preconditioning in renal ischemia/reperfusion injury, in a model of thoracoabdominal aorta approach. *J Surg Res.* 2009;154:267.
34. Murray E, Jenning RB, Reimer KA. Preconditioning with ischemia: a delay in lethal cell injury in ischemic myocardium. *Circulation.* 1986;74:1123.
35. Subramanian A, Tamayo P, Mootha VK, et al. Gene set enrichment analysis: a knowledge-based approach for interpreting genome-wide expression profiles. *Proc Natl Acad Sci U S A.* 2005;102:15545.
36. Doniger SW, Salomonis N, Dahlquist KD, et al. MAPPFinder: using Gene Ontology and GenMAPP to create a global gene-expression profile from microarray data. *Genome Biol.* 2003;4:R7.
37. Goeman JJ, van de Geer SA, de Kort F, et al. A global test for groups of genes: testing association with a clinical outcome. *Bioinformatics.* 2004;20:93.

Copyright © 2015 Wolters Kluwer Health, Inc. All rights reserved.